Model 243-RPC Pilot Operated Regulators

Installation and Maintenance Instructions

Rugged, Reliable with Value-added Features

Genuine, pilot-operated regulators use the same relay operation principle as the well-known 441-VPC. Use of this principle results in exceptionally precise regulation. The 243-RPC is accurate within ±0.5% absolute outlet pressure from minimum to wide-open flow.

Relay operation also minimizes the effects of inlet variations. Accuracy is largely unaffected by swings in inlet pressure.

The 243-RPC is made for fixed factoring, pressure factor measurement, pressure compensated metering and other applications requiring exceptionally precise pressure control. Wherever requirements call for maximum accuracy at minimum cost, the 243-RPC makes an excellent choice.

Spring Ranges

Outlet Pressure Set-Point Adjustment Range	Pilot Spring	
	Spring Color	Spring Part Number
3½" to 6½" w.c.	Red	143-08-021-00
5" to 8½" w.c.	Blue	143-08-021-01
6" to 14" w.c.	Green	143-08-021-02
12" to 28" w.c.	Orange	143-08-021-03
1 psig to 2 psig	Black	143-08-021-06
1 psig to 5 psig	White	138-18-021-01
3 psig to 15 psig	Gray	138-18-021-04
10 psig to 35 psig	Brown	138-18-021-03
3½" to 5 psig	Aluminum	138-18-021-05

Maximum Inlet Pressures

Orifice Sizes	Maximum Inlet Pressure	Outlet Pressure
¼", ⅜", ½"	150 psig	3½" w.c. to 35 psig
¾"	125 psig	
1"	60 psig	
1¼"	30 psig	

Minimum Inlet Pressure

For the regulator to be fully operable, inlet pressure must be at least 1½ psig greater than the outlet pressure.

General

Model Number	Description
243-RPC	Standard Construction.....page 3
243-RPC-A	Throat Opening Construction.....page 4
243-RPC-B	Throat Opening and Internal Control.....page 4

Pipe Sizes

1¼", 1½", 2" NPT Screwed and 2" Flanged

Temperature Limits

The 243-RPC Regulator may be used for flowing gas temperatures from -20°F to 150°F.

Buried Service

The 243-RPC Regulator is **not** recommended for buried service.

Increased Outlet Pipe Sizes

At higher flow rates, outlet piping should be increased in size in conformance with the following table. The flow rate values are maximum for the given outlet pressures and pipe sizes. Refer to the example and illustration for instructions on using the table.

Outlet Pressure	1¼" Pipe	1½" Pipe	2" Pipe*
3½" w.c.	9200 SCFH	14200 SCFH	30000 SCFH
7" w.c.	14200	21000	41600
14" w.c.	19400	29800	58200
1 psig	24600	41600	76500
2 psig	36300	58200	76500
3 psig	41000	76500	76500
5 psig	62500	76500	76500
7 psig and higher	76500	76500	76500

*Increase to 3" pipe size for capacities exceeding flows listed for 2" pipe.

Example: From the capacity table (page 5), a 1¼" model 243-RPC or 1¼" model 243-RPC-A has a capacity of 21,800 SCFH based on ¾" orifice, 7.0" w.c. outlet pressure and 25 psi inlet pressure. From the preceding table, outlet piping must be increased to 2" size to handle the full 21,800 SCFH. Note that if the maximum load does not exceed 14,200 SCFH then 1¼" pipe would be satisfactory and if it does not exceed 21,000 SCFH then 1 1/2" pipe would be satisfactory.

The increase should be immediately downstream of the regulator. Also, the control line should be connected at least 5 pipe diameters from the increase.

*This document replaces R-1343-R6

Pressure Control Accuracy

The 243-RPC and 243-RPC-A will hold outlet pressure to within ±0.5% accuracy (based on absolute pressure) from set-point flow to the capacity given in the tables on pages 5, 6 and 7. Set-point in all cases is based on a flow of 250 SCFH.

The ±0.5% accuracy also applies to the 243-RPC-B except for outlet pressures below 1 psig and/or flows above 20,000 SCFH wherein accuracy is within ±2%.

In general, if pipe runs are long and/or many fittings and accessories are used, sizing should be checked to avoid excessive pressure loss. This applies to inlet as well as outlet piping.

The example is illustrated by the following:

1¼" MODEL 243-RPC OR 1¼" MODEL 243-RPC-A

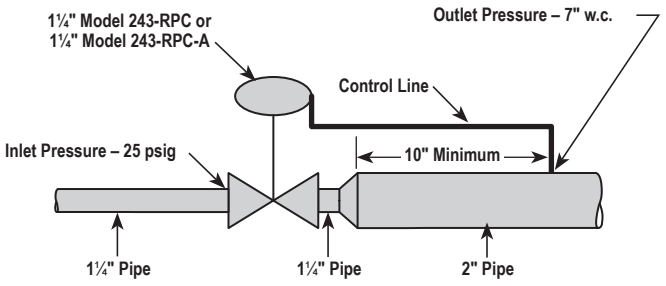

GIM1343-005

Inlet Pressure Effect

The following curves illustrate the effects of changing inlet pressure on the 243-RPC. Note the excellent accuracy performance in spite of the wide inlet variations.

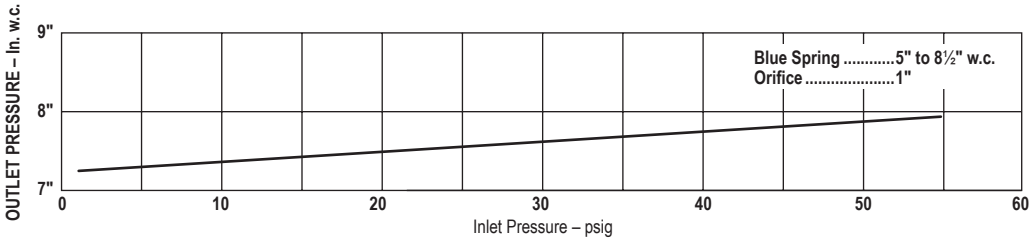

GIM1343-010

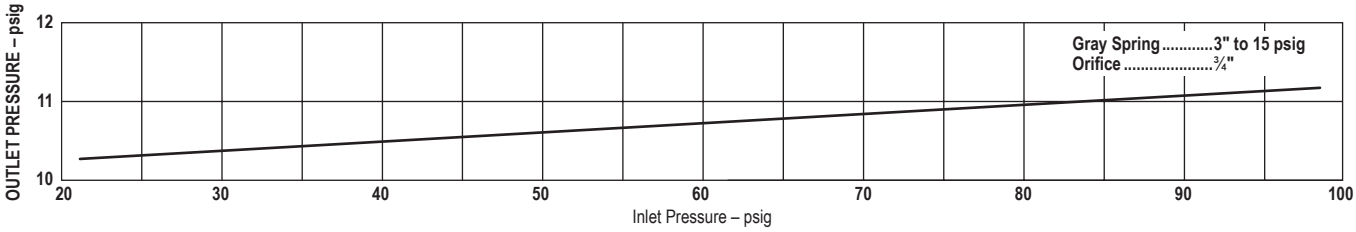

GIM1343-015

While curves for the other orifice sizes and spring ranges are not exactly the same, the differences are minor and the excellent performance shown is quite representative.

The variations result mainly from the inlet pressure effect on the pilot, and this can be largely eliminated with a load limited regulator. It should be installed on the inlet supply line to the pilot, as shown in the typical installation on pages 3 and 9.

243-RPC Pilot Operated Regulators

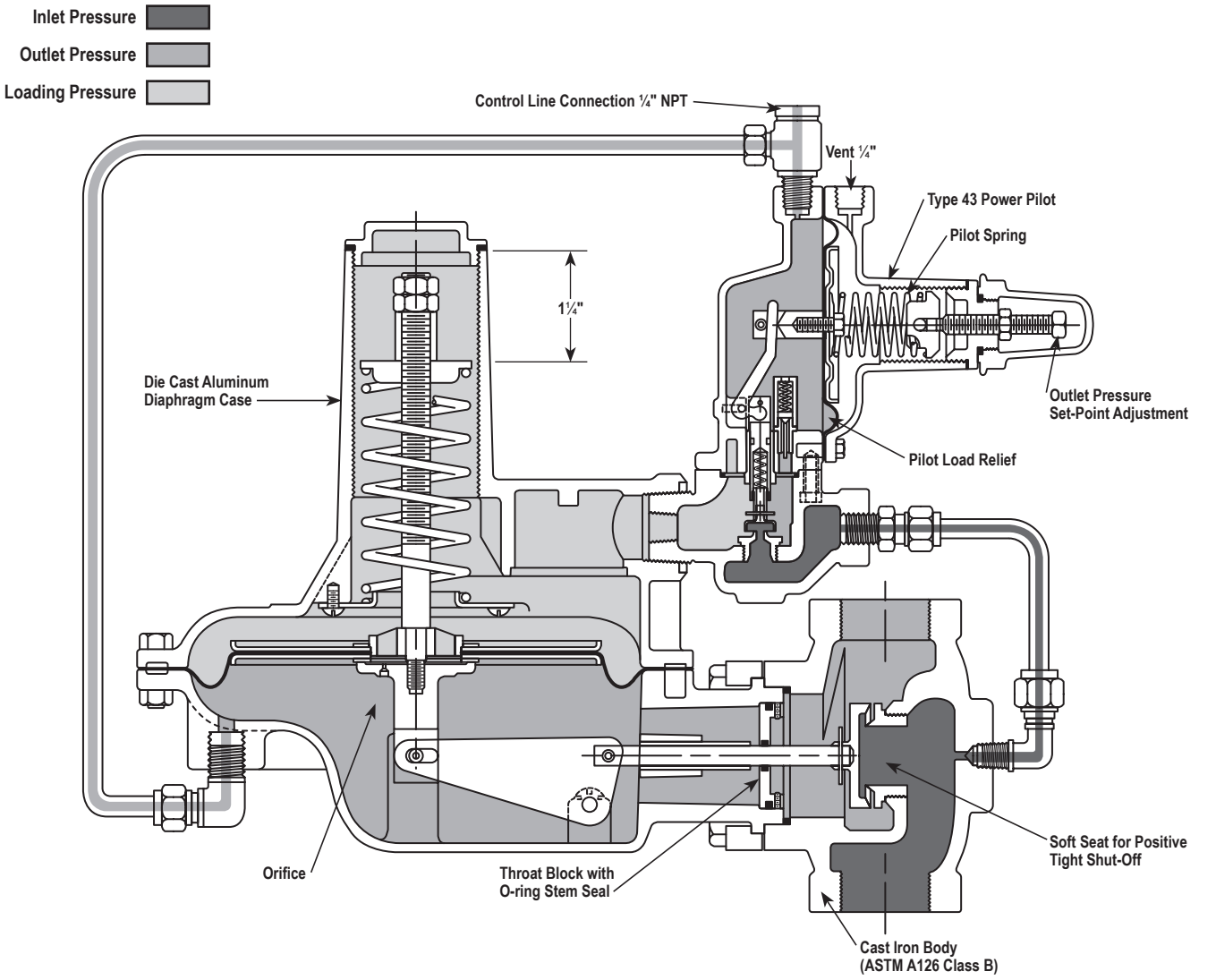

GIM1343-020

Other Variations

243-RPC-A

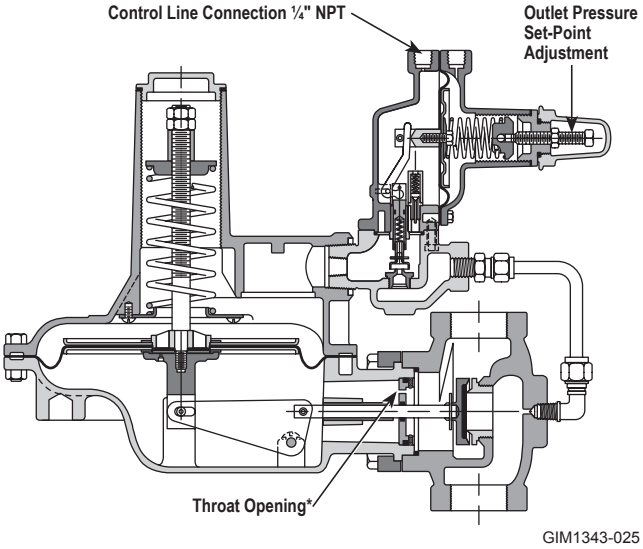

The 243-RPC-A has a throat opening for a faster response speed. Hence, it will react more quickly to fast load changes as, for example, on snap acting boilers.

Because of this opening, it can only be used in the downstream location in a monitor set (see Monitoring, page 9).

A typical installation is shown below.

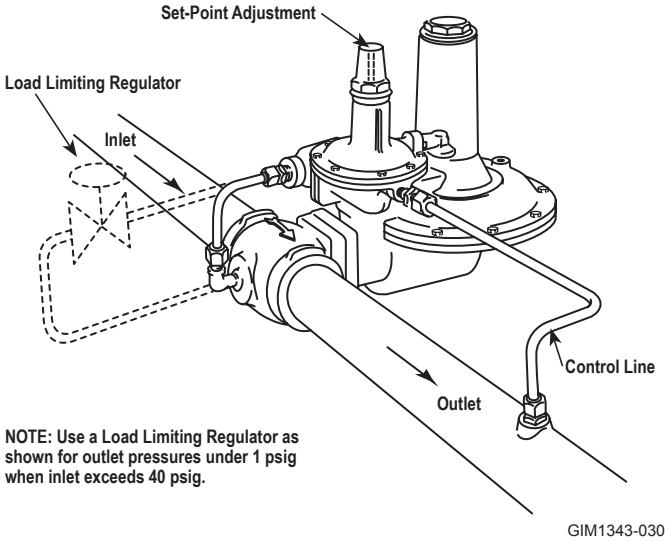

243-RPC-B

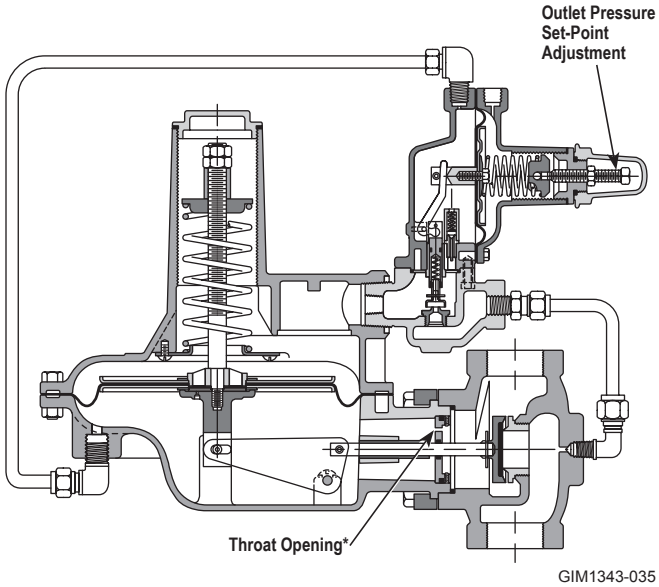

The 243-RPC-B does not require a control line. This simplifies installation. Also, the throat opening means a faster response speed.

Note from the capacity tables on pages 5, 6 and 7 that there is a slight loss in accuracy at outlet pressure under 1 psig and capacities above 20,000 SCFH.

The throat opening limits monitor set usage to the downstream location only (see Monitoring, page 9).

A typical installation is shown below.

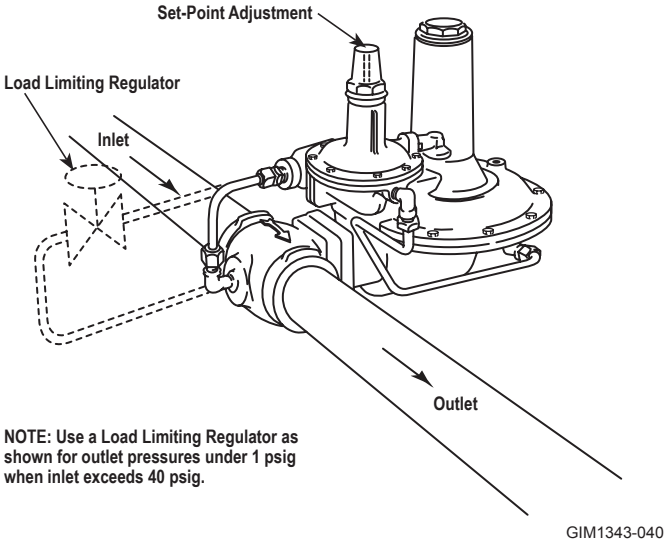

* Internal construction of the 243-RPC-A and 243-B differs from the 243-RPC by addition of an opening in the throat block.

Model 243-RPC Capacity Tables
Capacity in SCFH of Natural Gas (0.6 Specific Gravity – 14.65 psia – 60°F)

INLET PRES. psig	OUTLET PRESSURE psig (except as noted)	Models 243-RPC and 243-RPC-A						Model 243-RPC-B					
		1¼", 1½" and 2"				1½" and 2"		2"					
		Orifices				Orifices		Orifices					
		¼"	⅜"	½"	¾"	1"	1¼"	¼"	⅜"	½"	¾"	1"	1¼"
2	3½" w.c.	590	1300	2340	4950	8100	9400	590	1300	2340	4950	8100	9400
	7" w.c.	575	1250	2250	4800	7800	9000	575	1250	2250	4800	7800	9000
	14" w.c.	510	1150	2000	4450	7300	8500	510	1150	2000	4450	7300	8500
3	3½" w.c.	750	1630	2950	6250	10200	11900	750	1630	2950	6250	10200	11900
	7" w.c.	700	1630	2900	6150	10000	11700	700	1630	2900	6150	10000	11700
	14" w.c.	700	1540	2750	5900	9800	11200	700	1540	2750	5900	9800	11200
	1	600	1380	2450	5250	8600	10000	600	1380	2450	5250	8600	10000
5	3½" w.c.	1000	2220	3950	8450	13800	16000	1000	2220	3950	8450	13800	16000
	7" w.c.	1000	2200	3900	8350	13700	16000	1000	2200	3900	8350	13700	16000
	14" w.c.	960	2140	3850	8200	13500	15600	960	2140	3850	8200	13500	15600
	1	910	2100	3750	7850	12900	15000	910	2100	3750	7850	12900	15000
	2	800	1760	3200	6750	11000	12900	800	1760	3200	6750	11000	12900
	3	640	1450	2600	5550	9100	10600	640	1450	2600	5550	9100	10600
7	3½" w.c.	1220	2720	4900	10300	17000	19700	1220	2720	4900	10300	17000	19700
	7" w.c.	1220	2720	4850	10300	16800	19700	1220	2720	4850	10300	16800	19700
	14" w.c.	1210	2650	4750	10100	16500	19500	1210	2650	4750	10100	16500	19500
	1	1160	2600	4650	9850	16200	19000	1160	2600	4650	9850	16200	19000
	2	1090	2350	4300	9100	14800	17300	1090	2350	4300	9100	14800	17300
	3	970	2100	3800	8050	13200	15400	970	2100	3800	8050	13200	15400
	5	680	1550	2750	5900	9800	11200	680	1550	2750	5900	9800	11200
10	3½" w.c.	1550	3400	6000	12800	21000	24500	1550	3400	6000	12800	20000	22000
	7" w.c.	1550	3400	6000	12800	21000	24500	1550	3400	6000	12800	20000	23400
	14" w.c.	1470	3250	5900	12500	20400	23700	1470	3250	5900	12500	20400	23700
	1	1420	3220	5800	12350	20200	23500	1420	3220	5800	12350	20200	23500
	2	1410	3100	5600	11850	19700	22600	1410	3100	5600	11850	19700	22600
	3	1350	3000	5350	11350	18500	21500	1350	3000	5350	11350	18500	21500
	5	1140	2600	4650	9850	16200	18800	1140	2600	4650	9850	16200	18800
	7	860	2000	3550	7550	12400	14500	860	2000	3550	7550	12400	14500
15	1 and less	2000	4300	7700	16300	26700	31200	2000	4300	7700	16300	Table B*	Table A*
	2	1880	4200	7500	15950	26000	30400	1880	4200	7500	15950	26000	30400
	3	1840	4000	7300	15500	25400	29500	1840	4000	7300	15500	25400	29500
	5	1700	3800	6800	14500	23600	27500	1700	3800	6800	14500	23600	27500
	7	1580	3550	6300	13400	22000	25600	1580	3550	6300	13400	22000	25600
	10	1230	2850	5000	10700	17500	20400	1230	2850	5000	10700	17500	20400

* See Capacity Table on Page 7.

Model 243-RPC Capacity Tables (Continued)
Capacity in SCFH of Natural Gas (0.6 Specific Gravity – 14.65 psia – 60°F)

INLET PRES. psig	OUTLET PRESSURE psig (except as noted)	Models 243-RPC and 243-RPC-A						Model 243-RPC-B					
		1¼", 1½" and 2"				1½" and 2"		2"					
		Orifices				Orifices		Orifices					
		¼"	⅜"	½"	¾"	1"	1¼"	¼"	⅜"	½"	¾"	1"	1¼"
20	3 and less	2300	5000	9000	19000	31200	36400	2300	5000	9000	19000	Table B*	Table A*
	5	2150	4900	8800	18700	30500	35600	2150	4900	8800	18700	30500	35600
	7	2100	4600	8300	17500	28600	33300	2100	4600	8300	17500	28600	33300
	10	1850	4250	7600	16000	26200	30500	1850	4250	7600	16000	26200	30500
	15	1350	3100	5500	11700	19100	22300	1350	3100	5500	11700	19100	22300
25	5 and less	2600	5800	10300	21800	35700	41600	2600	5800	10300	Table C*	Table B*	Table A*
	7	2500	5650	10000	21400	35000	41000	2500	5650	10000	21400	35000	41000
	10	2350	5300	9450	20000	32700	38300	2350	5300	9450	20000	32700	38300
	15	2000	4750	8200	17200	28200	32700	2000	4750	8200	17200	28200	32700
	20	1450	3300	5900	12400	20200	23700	1450	3300	5900	12400	20200	23700
30	7 and less	2950	6500	11600	24500	40200	47000	2950	6500	11600	Table C*	Table B*	Table A*
	10	2850	6400	11300	24000	39400	46000	2850	6400	11300	24000	39400	46000
	15	2550	5750	10000	21700	35500	41500	2550	5750	10000	21700	35500	41500
	20	2180	4900	8750	18500	30400	35400	2180	4900	8750	18500	30400	35400
	25	1550	3600	6300	13200	21600	25400	1550	3600	6300	13200	21600	25400
40	10 and less	3600	7950	14200	30000	49200	—	3600	7950	14200	Table C*	Table B*	—
	15	3500	7800	14000	29500	48500	—	3500	7800	14000	29500	48500	—
	20	3200	7200	12800	27200	44500	—	3200	7200	12800	27200	44500	—
	25	3000	6600	11700	24500	40500	—	3000	6600	11700	24500	40500	—
	30	2420	5400	9800	20400	33400	—	2420	5400	9800	20400	33400	—
	35	1720	3900	7000	14800	24300	—	1720	3900	7000	14800	24300	—
50	15 and less	4300	9400	16800	35500	58200	—	4300	9400	16800	Table C*	Table B*	—
	20	4150	9250	16500	35000	57400	—	4150	9250	16500	35000	57400	—
	25	3850	8600	15400	32500	53200	—	3850	8600	15400	32500	53200	—
	30	3600	8100	14500	30500	50000	—	3600	8100	14500	30500	50000	—
	35	3200	7200	13000	27100	44600	—	3200	7200	13000	27100	44600	—
60	20 and less	4900	10900	19400	41000	67200	—	4900	10900	19400	Table C*	Table B*	—
	25	4850	10500	19000	40500	66000	—	4850	10500	19000	40500	66000	—
	30	4650	10000	18500	39000	63500	—	4650	10000	18500	39000	63500	—
	35	4300	9800	17000	36400	59500	—	4300	9800	17000	36400	59500	—
80	35 and less	6250	13800	24600	52000	—	—	6250	13800	Table D*	Table C*	—	—
100	35 and less	7600	16700	29800	62500	—	—	7600	16700			—	—
125	35 and less	9200	20400	36300	76500	—	—	9200	20400			—	—
150	35 and less	10500	23000	41000	—	—	—	10500	23000		—	—	—

* See Capacity Table on Page 7.

Model 243-RPC Capacity Tables (Continued)

TABLE and ORIFICE	INLET PRES. psig	2" Model 243-RPC-B													
		OUTLET PRESSURE													
		3½" w.c.	7" w.c.	14" w.c.	1 psig	2 psig	3 psig	5 psig	7 psig	10 psig	15 psig	20 psig	25 psig	30 psig	35 psig
TABLE A (1¼" orifice)	15	22000	24000	28000	30000	30400	29500	27500	25600	20400	—	—	—	—	—
	20	22000	26000	30000	35000	35600	35600	35600	33300	30500	22300	—	—	—	—
	25	22000	26000	30000	35000	38000	41000	41000	41000	38300	32700	23700	—	—	—
	30	22000	26000	30000	35000	39000	43000	47000	47000	46000	41500	35400	25400	—	—
TABLE B (1" orifice)	15	20000	20000	21600	24000	26000	25400	23600	22000	17500	—	—	—	—	—
	20	20000	20250	21800	28000	29000	30000	30500	28600	26200	19100	—	—	—	—
	25	20000	20500	22000	28500	30000	32000	34000	35000	32700	28200	20200	—	—	—
	30	20000	21600	23500	29500	32000	34000	36000	38000	39400	35500	30400	21600	—	—
	40	20000	23000	26000	30000	33000	36000	38500	41000	46000	48500	44500	40500	33400	24300
	50	20000	23500	27000	30000	33000	36000	39000	43000	48000	52000	57400	53200	50000	44600
	60	20000	24000	28000	30000	33000	36000	40000	45000	50000	52000	60000	66000	63500	59500
TABLE C (¾" orifice)	25	20000	20500	21000	21800	21800	21800	21800	21400	20000	17200	12400	—	—	—
	30	20000	21600	22500	23500	24500	24500	24500	24500	24500	21700	18500	13200	—	—
	40	20000	23000	26000	28500	29500	29500	29500	29500	29500	29500	27200	24500	20400	14800
	50	20000	23500	27000	30000	33000	35000	35000	35000	35000	35000	35000	32500	30500	27100
	60	20000	24000	28000	30000	33000	36000	40000	40500	40500	40500	40500	40500	39000	36400
	80	20000	24000	29000	30000	35000	38000	41000	45000	48000	50000	52000	52000	52000	52000
	100	20000	24000	29000	30000	35000	38000	41000	45000	50000	53000	56000	56000	62500	62500
	125	20000	24000	29000	30000	35000	38000	41000	45000	60000	64000	68000	72000	76500	76500
TABLE D (½" orifice)	80	20000	24000	24600	24600	24600	24600	24600	24600	24600	24600	24600	24600	24600	24600
	100	20000	24000	27000	28500	28500	28500	28500	28500	28500	28500	28500	28500	28500	28500
	125	20000	24000	27000	30000	35000	36300	36300	36300	36300	36300	36300	36300	36300	36300
	150	20000	24000	27000	30000	35000	36300	41000	41000	41000	41000	41000	41000	41000	41000

Maximum Emergency Pressure

The maximum pressure the regulator inlet may be subjected to under abnormal conditions without causing damage to the regulator is:

¼" through ¾" orifices ..... 175 psig
1" orifice..... 110 psig
1¼" orifice..... 80 psig

The maximum pressure that may be applied to the control line connection of Models 243-RPC and 243-RPC-A without causing damage to internal parts of the regulators is set-point plus 5 psig. The maximum pressure the outlet of the 243-RPC-A and 243-RPC-B may be subjected to without causing damage to internal parts of the regulator is set-point plus 5 psig. Set-point is defined as the outlet pressure a regulator is adjusted to deliver.

The maximum pressure that can be safely contained by the diaphragm case is 45 psig. Safely contained means no external leakage as well as no part failure bursting.

Overpressurization Protection

Protect the downstream piping system and the regulator's low pressure chambers against overpressurization due to possible regulator malfunction or failure to achieve complete lockup. The allowable outlet pressure is the lowest of the maximum pressures permitted by federal codes, state codes, Sensus Bulletin RDS-1498, or other applicable standards. The method of protection can be a relief valve, monitor regulator, shutoff device, or similar mechanism.

Capacities at Other Pressures

Capacity for pressure reductions not listed in the table can be calculated with the following formulas:

1. $Q = K\sqrt{P_o(P_i - P_o)}$
2. $Q = \frac{K P_i}{2}$

Q = maximum capacity of the regulator (in SCGH of 0.6 specific gravity natural gas).
K = the **"K" factor**, the regulator constant (see below)
P_i = **absolute** inlet pressure (psia)
P_2 = **absolute** outlet pressure (psia)

Use formula 1. When $\frac{P_i}{P_o}$ is less than 1.894.

Use formula 2. When $\frac{P_i}{P_o}$ is greater than 1.894.

Orifice size:	¼"	⅜"	½"	¾"	1"	1¼"
"K" Factor:	132	292	520	1100	1800	2480

Other Gases

Model 243-RPC Regulators are mainly used on natural gas. However, they perform equally well on LP gas, nitrogen, dry CO_2, air and others.

Type of Gas	Correction Factor
Air (Specific Gravity 1.0)	0.77
Propane (Specific Gravity 1.53)	0.63
1350 BTU Propane-Air Mix (Specific Gravity 1.20)	0.71
Nitrogen (Specific Gravity 0.97)	0.79
Dry Carbon Dioxide (Specific Gravity 1.52)	0.63

For other non-corrosive gases use the following formula:

$$\text{CORRECTION FACTOR} = \sqrt{\frac{0.60}{\text{Specific gravity of the gas}}}$$

For use with gases not listed above, please contact your Sensus Representative or Industrial Distributor for recommendations.

Monitoring

Monitoring is used to guard against a regulator failure causing excessive pressure downstream.

A monitor set consists of two regulators in a series, one of which is a standby. Normally, the main regulator provides controls. The standby (the monitor) is adjusted for a somewhat higher set-point pressure so it is normally open and allows the gas to flow freely. If a failure in the main regulator causes the outlet pressure to rise, the monitor takes over and controls outlet pressure to its somewhat higher set-point.

As illustrated, 243-RPC regulators can be used for monitoring.

Note the following:

1. Either regulator can be used as the monitor (main regulator upstream and monitor downstream, or monitor upstream and main regulator downstream). Both arrangements have their advantages and which is used depends on individual requirements and preferences.
2. The upstream regulator (whether the main regulator or monitor) must have a blocked throat with stem seal and an external control line. Hence, only use the standard 243-RPC in the upstream position.
3. The downstream regulator (whether the main regulator or monitor) can be the same as note 2 above or have internal control. Hence, a standard 243-RPC, 243-RPC-A or 243-RPC-B can be used.
4. For the monitor (whether upstream or downstream), a load limiting regulator should be used on the inlet supply to the pilot as illustrated. Adjust the set-point 3 to 4 psig higher than the monitor set-point.
5. For the main regulator, a load limiting regulator is necessary only for outlet pressures below 1 psig where inlet exceeds 40 psig. Adjust the set-point 3 to 4 psig higher than the main regulator set-point.
6. The capacity of the regulators in a monitor set should be calculated by taking 70% of the capacity of the smaller regulator in the monitor set or 70% of either unit if they are the same size.

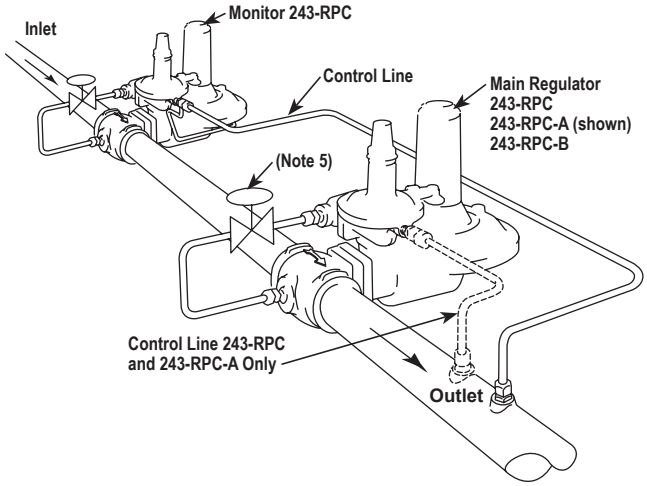

GIM1343-045

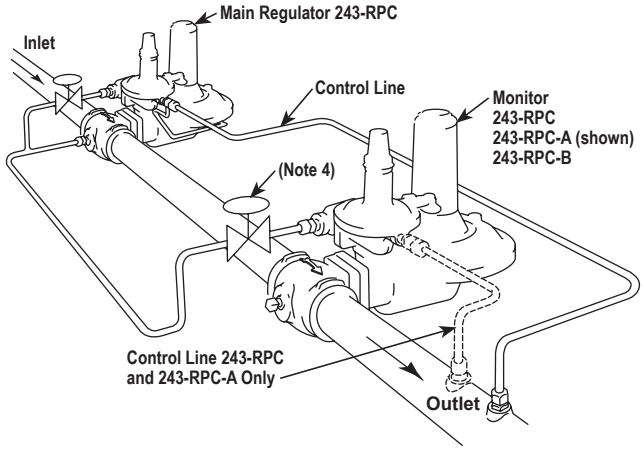

GIM1343-050

Typical Installation

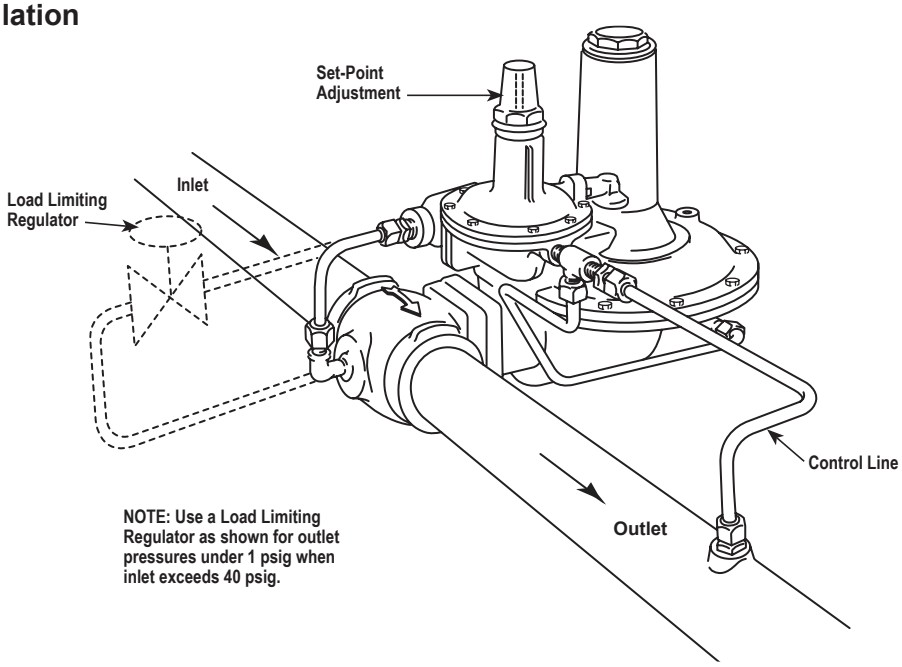

GIM1343-055

Materials of Construction

Bodies	Cast Iron (ASTM A126 Class B)
Diaphragm Cases	Die Cast Aluminum Alloy
Diaphragms	Buna-N with Nylon Fabric Insert
Diaphragm Pans	Plated Steel
Main Diaphragm Coupling	Zinc Die Casting
Orifice	Brass
Valve	Viton A or Buna-N Soft Seat in Aluminum Holder
Stem	Brass
Levers	Plated Stamped Steel
O-rings and Tetra Seals	Buna-N
Main Spring Seal Cup	Zinc Die Casting
Pilot Adjustment Screw	Plated Steel
Pilot Seal Cap	Cast Iron
Pilot Trim	Stainless Steel
Pilot Diaphragm Coupling	Plated Steel
Pilot Load Relief	Plated Steel
Pilot Tubing	Steel
Tubing Fittings	Brass

Metrication

Use the following for metric conversions:

std. meters^3/hr. x 35.31 = std. ft.^{3}/hr. (SCFH) std. ft.^{3}/hr. (SCFH) x 0.0283 = std. meters^3/hr.
kilograms/centimeter^2(kg/cm^2) x 14.22 = psig psig x 0.0703 = kilograms/centimeter^2(kg/cm^2)
kilopascals (kPa) x 0.145 = psig psig x 6.90 = kilopascals (kPa)
bars x 14.50 = psig psig x 0.69 = bars
millimeters water (mm H_2O) x .0394 = in. w.c. in. w.c. x 25.4 = millimeters water (mm H_2O)
millimeters mercury (mm Hg) x 0.535 = in. w.c. in. w.c. x 1.868 = millimeters mercury (mm Hg)

Periodic Inspection

Regulators are pressure control devices with numerous moving parts subject to wear that is dependent upon particular operating conditions. To assure continuous satisfactory operation, a periodic inspection schedule must be adhered to with the frequency of inspection determined by the severity of service and applicable laws and regulation. See bulletin RM-1343 for complete field service instructions and warranty obligation.

Dimensions

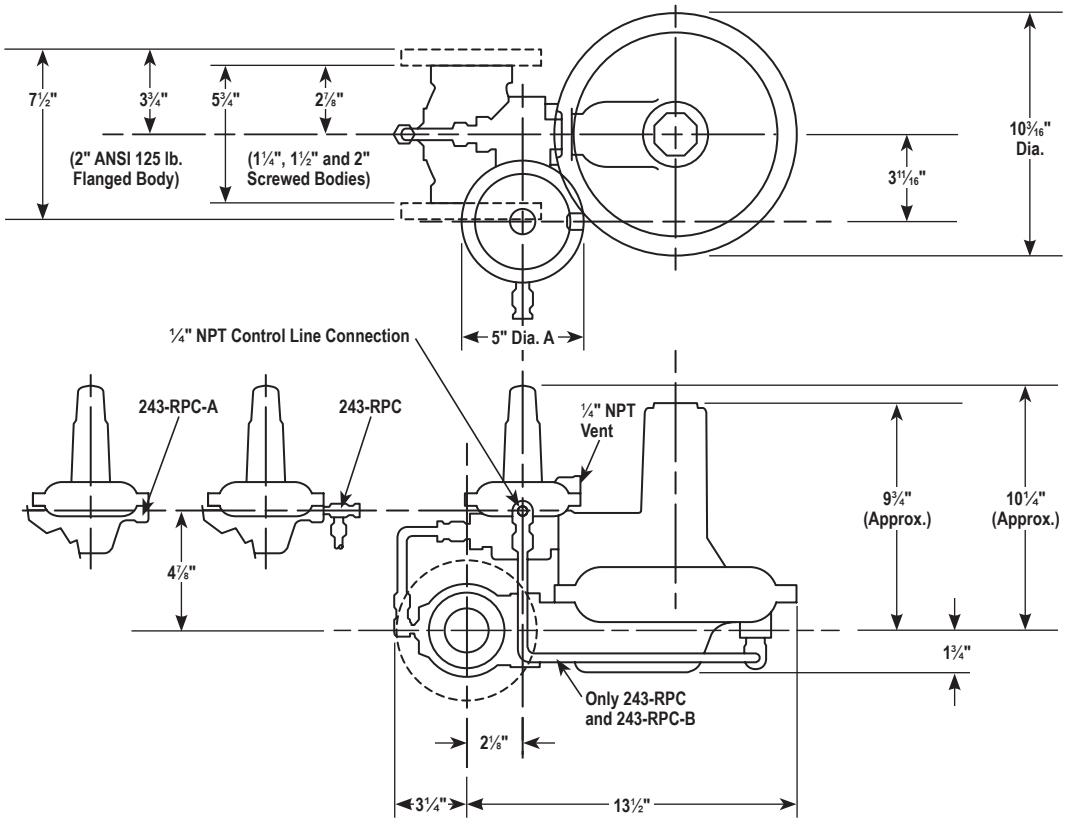

GIM1343-060

Mounting Positions

Position No. 1

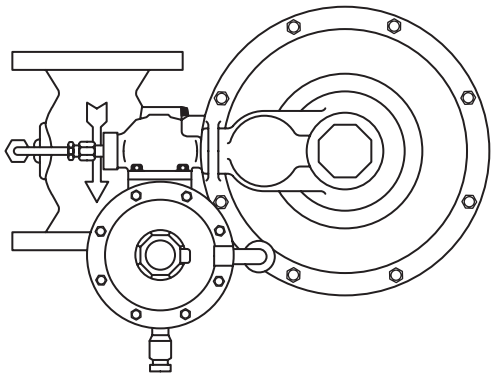

GIM1343-065

Position No. 2

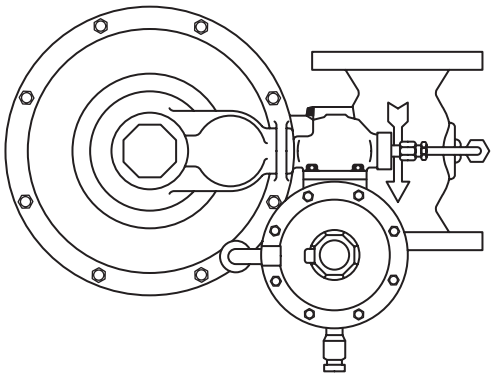

GIM1343-070

NOTE: If not specified, Position No. 1 will be furnished.

How to Order

Specify:

1. Pipe Size and Model Number (page 1).
2. Screwed or Flanged Connections (applies only to 2" size).
3. Mounting Position (above).
4. Orifice Size.
5. Inlet Pressure (also maximum and minimum if available).
6. Outlet Pressure Setting.
7. Capacity Required (SCFH).
8. Gas (natural gas, propane, etc.).

Authorized Distributor:

All products purchased and services performed are subject to Sensus' terms of sale, available at either http://na.sensus.com/TC/TermsConditions.pdf or 1-800-METER-IT. Sensus reserves the right to modify these terms and conditions in its own discretion without notice to the customer.

This document is for informational purposes only, and SENSUS MAKES NO EXPRESS WARRANTIES IN THIS DOCUMENT. FURTHERMORE, THERE ARE NO IMPLIED WARRANTIES, INCLUDING WITHOUT LIMITATION, WARRANTIES AS TO FITNESS FOR A PARTICULAR PURPOSE AND MERCHANTABILITY. ANY USE OF THE PRODUCTS THAT IS NOT SPECIFICALLY PERMITTED HEREIN IS PROHIBITED. © 2012 Sensus.

805 Liberty Boulevard
DuBois, PA 15801
1-800-375-8875

For more information, visit us at sensus.com/gas